IXYS

HiPerFET™ Power MOSFET

IXFE 180N10

V_{DSS} = 100 V
I_{D25} = 176 A
$R_{DS(on)}$ = 8 mΩ

$t_{rr} \leq 250$ ns

Single Die MOSFET

Preliminary data sheet

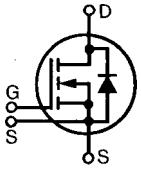

Symbol	Test Conditions	Maximum Ratings	
V_{DSS}	T_J = 25°C to 150°C	100	V
V_{DGR}	T_J = 25°C to 150°C, R_{GS} = 1MΩ	100	V
V_{GS}	Continuous	±20	V
V_{GSM}	Transient	±30	V
I_{D25}	T_C = 25°C	176	A
$I_{L(RMS)}$	Terminal (current limit)	100	A
I_{DM}	T_C = 25°C; Note 1	720	A
I_{AR}	T_C = 25°C	180	A
E_{AR}	T_C = 25°C	60	mJ
E_{AS}	T_C = 25°C	3	J
dv/dt	$I_S \leq I_{DM}$, di/dt ≤ 100 A/µs, $V_{DD} \leq V_{DSS}$ $T_J \leq$ 150°C, R_G = 2 Ω	5	V/ns
P_D	T_C = 25°C	500	W
T_J		-55 ... +150	°C
T_{JM}		150	°C
T_{stg}		-55 ... +150	°C
T_L	1.6 mm (0.063 in) from case for 10 s	300	°C
V_{ISOL}	50/60 Hz, RMS t = 1 min $I_{ISOL} \leq$ 1 mA t = 1 s	2500 3000	V~ V~
M_d	Mounting torque Terminal connection torque	1.5/13Nm/lb.in. 1.5/13Nm/lb.in.	
Weight		19	g

Symbol	Test Conditions (T_J = 25°C, unless otherwise specified)		Characteristic Values Min.	Typ.	Max.	
V_{DSS}	V_{GS} = 0 V, I_D = 3mA		100			V
$V_{GS(th)}$	$V_{DS} = V_{GS}$, I_D = 8mA		2		4	V
I_{GSS}	V_{GS} = ±20V, V_{GS} = 0V				±100	nA
I_{DSS}	$V_{DS} = V_{DSS}$ V_{GS} = 0 V	T_J = 25°C T_J = 125°C			100 2	µA mA
$R_{DS(on)}$	V_{GS} = 10V, $I_D = I_T$ Note 2				8	mΩ

ISOPLUS 227™ (IXFE)

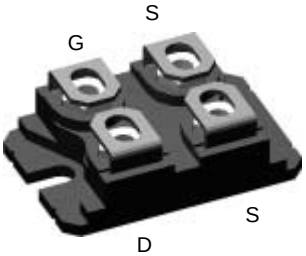

G = Gate D = Drain
S = Source

Either Source terminal at miniBLOC can be used as Main or Kelvin Source

Features
- Conforms to SOT-227B outline
- Encapsulating epoxy meets UL 94 V-0, flammability classification
- Low $R_{DS(on)}$ HDMOS™ process
- Rugged polysilicon gate cell structure
- Unclamped Inductive Switching (UIS) rated
- Low package inductance
- Fast intrinsic Rectifier

Applications
- DC-DC converters
- Synchronous rectification
- Battery chargers
- Switched-mode and resonant-mode power supplies
- DC choppers
- Temperature and lighting controls
- Low voltage relays

Advantages
- Easy to mount
- Space savings
- High power density

© 2002 IXYS All rights reserved

Symbol	Test Conditions (T_J = 25°C, unless otherwise specified)	Characteristic Values Min.	Typ.	Max.	
g_{fs}	V_{DS} = 10 V; I_D = 60A, Note 2	60	90		S
C_{iss}			9100		pF
C_{oss}	V_{GS} = 0 V, V_{DS} = 25 V, f = 1 MHz		3200		pF
C_{rss}			1600		pF
$t_{d(on)}$			50		ns
t_r	V_{GS} = 10 V, V_{DS} = 0.5 • V_{DSS}, I_D = I_T		90		ns
$t_{d(off)}$	R_G = 1 Ω (External),		140		ns
t_f			65		ns
$Q_{g(on)}$			360		nC
Q_{gs}	V_{GS} = 10 V, V_{DS} = 0.5 • V_{DSS}, I_D = I_T		65		nC
Q_{gd}			190		nC
R_{thJC}				0.25	K/W
R_{thCK}	Note: I_T = 90 A		0.07		K/W

Source-Drain Diode

Symbol	Test Conditions (T_J = 25°C, unless otherwise specified)	Characteristic Values Min.	Typ.	Max.	
I_S	V_{GS} = 0			180	A
I_{SM}	Repetitive; Note1			720	A
V_{SD}	I_F = 100 A, V_{GS} = 0 V, Note2			1.5	V
t_{rr}				250	ns
Q_{RM}	I_F = 50 A, -di/dt = 100 A/µs, V_R = 50 V		1.1		µC
I_{RM}			13		A

Notes:
1. Pulse width limited by T_{JM}.
2. Pulse test, t ≤ 300 ms, duty cycle d ≤ 2 %
3. I_T = 90A

ISOPLUS-227 B

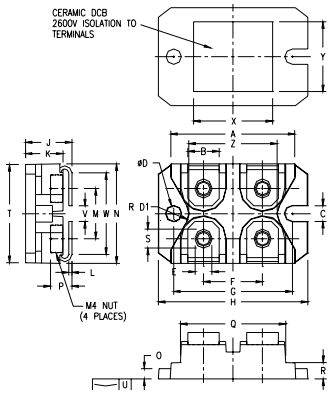

SYM	INCHES MIN	INCHES MAX	MILLIMETERS MIN	MILLIMETERS MAX
A	1.240	1.270	31.50	32.26
B	.310	.330	7.87	8.38
C	.155	.165	3.94	4.19
D	.155	.165	3.94	4.19
D1	.150	.157	3.81	3.98
E	.160	.168	4.06	4.27
F	.587	.595	14.91	15.11
G	1.186	1.193	30.12	30.30
H	1.489	1.505	37.80	38.23
J	.465	.481	11.81	12.22
K	.370	.380	9.40	9.65
L	.030	.033	0.76	0.84
M	.496	.506	12.60	12.85
N	.990	1.001	25.15	25.42
O	.100	.105	2.54	2.67
P	.195	.235	4.95	5.97
Q	1.045	1.059	26.54	26.90
R	.160	.170	4.06	4.32
S	.186	.191	4.72	4.85
T	.968	.987	24.59	25.07
U	-.001	.002	-0.03	0.05
V	.130	.160	3.30	4.06
W	.780	.830	19.81	21.08
X	.770	.810	19.56	20.57
Y	.680	.720	17.27	18.29
Z	.885	.892	22.48	22.66

Please see IXFN180N10 data sheet for characteristic curves.

IXYS reserves the right to change limits, test conditions, and dimensions.

IXYS MOSFETS and IGBTs are covered by one or more of the following U.S. patents: 4,835,592 4,881,106 5,017,508 5,049,961 5,187,117 5,486,715 6,306,728B1 4,850,072 4,931,844 5,034,796 5,063,307 5,237,481 5,381,025